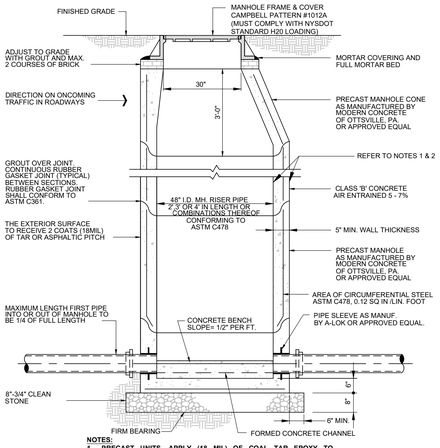

NOTES:
1. **PRECAST UNITS, APPLY (18 MIL) OF COAL TAR EPOXY TO EXTERNAL WALLS.**
2. **BLOCK UNITS, APPLY 1/2" OF PARGING TO INTERIOR & EXTERIOR WALLS AND (15 MIL) OF HOT ASPHALITC TAR OR PITCH TO EXTERIOR WALLS.**

1 STANDARD PRECAST MANHOLE
SCALE: NTS

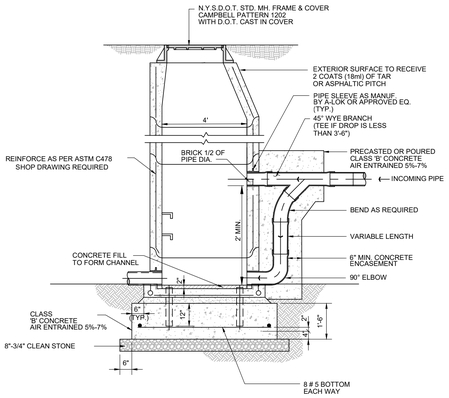

SECTION "A-A"

2 PRECAST SANITARY DROP MANHOLE
SCALE: NTS

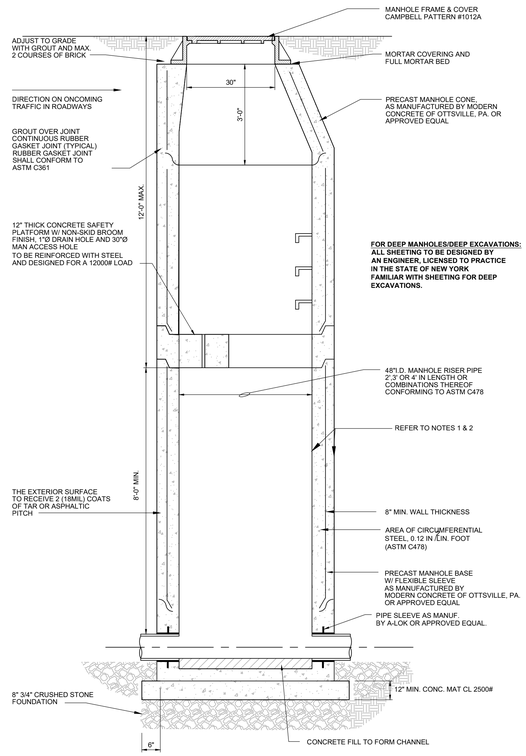

3 STANDARD PRECAST MANHOLE (DEPTH >12')
SCALE: NTS

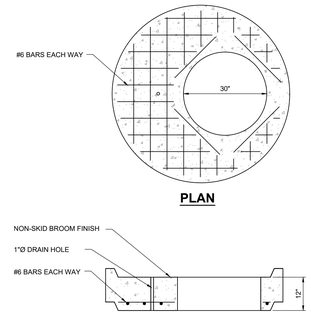

NOTES:
1. **PRECAST UNITS, APPLY (18 MIL) OF COAL TAR EPOXY TO EXTERNAL WALLS**
2. **BLOCK UNITS, APPLY 1/2" OF PARGING INTERIOR & EXTERIOR WALLS AND (15 MIL) OF HOT ASPHALTIC TAR OR PITCH TO EXTERIOR WALLS**

4 SAFETY PLATFORM
SCALE: NTS

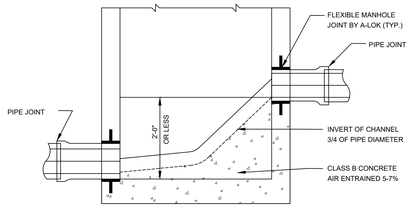

5 MANHOLE CHUTE
SCALE: NTS

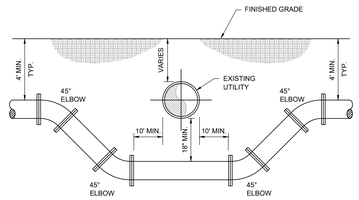

NOTE:
WHEN THE EXISTING UTILITY IS A SANITARY SEWER, SANITARY SEWER LINE SHALL BE ENCASED IN 6" OF CONCRETE 10 FEET BEFORE AND AFTER THE POINT OF CROSSING.

6 UTILITY CROSSING
SCALE: NTS

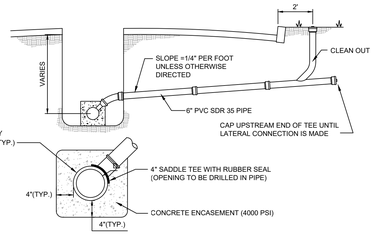

NOTE:
USE SADDLE TEES ONLY WHEN CONNECTING TO EXISTING MAINS. TEE WYES SHALL BE INSTALLED AT APPROPRIATE LOCATIONS FOR NEW DEVELOPMENT WHICH REQUIRE MAIN EXTENSIONS; SADDLE TEES WILL NOT BE PERMITTED

7 SANITARY SEWER TYPICAL HOUSE CONNECTION
SCALE: NTS

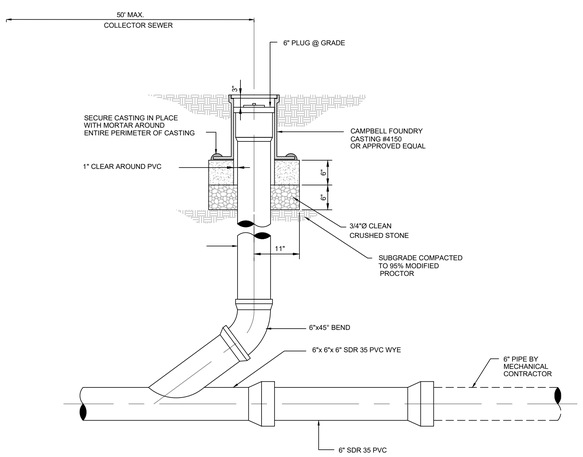

8 STANDARD CLEANOUT
SCALE: NTS

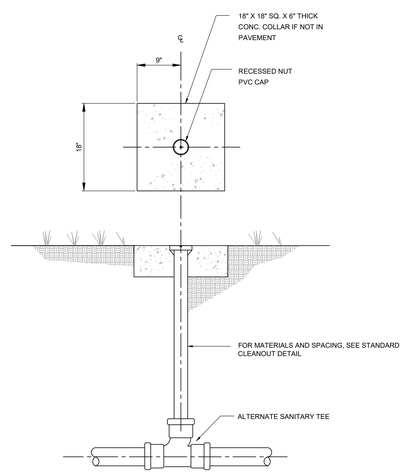

9 CLEANOUT IN GRASSED AREAS
SCALE: NTS

SANITARY SEWER NOTES

1. **ALL SANITARY SEWER MAINS SHALL BE INSTALLED IN ACCORDANCE WITH THE RULES AND REGULATIONS OF THE NYSDEC AND SHALL CONFORM TO THE STANDARDS OF THE TOWNSHIP ENGINEER.**
2. **THE SANITARY SEWER SHALL BE SEPARATED FROM ALL WATER MAINS BY A MINIMUM OF TEN (10) FEET HORIZONTALLY AND/OR EIGHTEEN (18) INCHES VERTICALLY WHENEVER A CROSSING MAY OCCUR. THE WATER MAIN SHOULD BE LOCATED ABOVE THE SANITARY SEWER BY EIGHTEEN (18) INCHES MINIMUM. IF THIS SEPARATION CANNOT BE MET, THE SANITARY SEWER MUST BE ENCASED IN 6" OF CONCRETE FOR A DISTANCE OF TEN (10) FEET IN EACH DIRECTION FROM THE POINT OF CROSSING.**
3. **THE TOWNSHIP ENGINEER SHALL BE NOTIFIED IN ADVANCE OF SEWER INSTALLATION. NO SEWERS SHALL BE INSTALLED WITHOUT INSPECTION BY THE TOWNSHIP ENGINEER.**
4. **TRENCH REINFORCEMENT SHALL BE INSTALLED AS REQUIRED BY THE TOWNSHIP ENGINEER AND O.S.H.A.**
5. **THE CONTRACTOR SHALL PERFORM AN INFILTRATION OR A LOW PRESSURE EXFILTRATION TEST, DEFLECTION TEST, AIR TEST AND VIDEO INSPECTION (V/A CLOSED-CIRCUIT TV) ON EACH SECTION OF THE PIPE BETWEEN MANHOLES. THE TOWNSHIP ENGINEER SHALL DESIGNATE THE TYPE OF TEST TO BE PERFORMED AND THE MANNER IN WHICH IT SHALL BE CONDUCTED. THE TEST SHALL BE WITNESSED BY THE TOWNSHIP ENGINEER.**
6. **THE CONTRACTOR SHALL FIELD VERIFY THE HORIZONTAL AND VERTICAL LOCATIONS OF ALL MANHOLES IN THE AREA OF THE PROPOSED IMPROVEMENTS, AND THIS INFORMATION IS TO BE USED TO CONFIRM THE ELEVATION OF THE SANITARY LATERALS LEAVING BUILDINGS.**
7. **ALL SANITARY SEWER LATERALS FROM BUILDINGS TO STREET SHALL BE COORDINATED WITH THE PLUMBING PLANS PRIOR TO THE START OF CONSTRUCTION.**
8. **ALL SANITARY MANHOLES SHALL BE SET ON A BED OF 3/4"Ø CRUSHED STONE, 6" THICK.**
9. **MINIMUM DEPTH OF COVER FOR ALL SANITARY SEWERS SHALL BE 4'-0".**
10. **ALL SANITARY SEWER LINES LOCATED WITHIN AREAS OF FILL SHALL BE CEMENT LINED DUCTILE IRON PIPE (CLASS 52). STONE BEDDING SHALL BE INSTALLED UNDER ALL SANITARY SEWERS WITHIN AREAS OF FILL. STONE BEDDING SHALL BE PLACED ON STABLE SOIL SUBSTRATUM.**

IT IS A VIOLATION OF NYS EDUCATION LAW, ARTICLE 145 SECTION 7209.2, FOR ANY PERSON, UNLESS THEY ARE ACTING UNDER THE DIRECTION OF A LICENSED PROFESSIONAL ENGINEER OR LAND SURVEYOR, TO ALTER AN ITEM IN ANY WAY. IF AN ITEM BEARING THE SEAL OF AN ENGINEER OR LAND SURVEYOR IS ALTERED, THE ALTERING ENGINEER OR LAND SURVEYOR SHALL AFFIX TO THE ITEM HIS SEAL AND THE NOTATION "ALTERED BY" FOLLOWED BY HIS SIGNATURE AND THE DATE OF SUCH ALTERATION, AND A SPECIFIC DESCRIPTION OF THE ALTERATION.

ALL DIMENSIONS MUST BE VERIFIED BY THE CONTRACTOR. NOTIFY PAULUS, SOKOLOWSKI AND SARTOR OF ANY CONFLICTS, ERRORS, AMBIGUITIES OR DISCREPANCIES IN THE CONTRACT DRAWINGS OR SPECIFICATIONS BEFORE PROCEEDING WITH CONSTRUCTION.

ALL DIMENSIONS SHALL BE AS NOTED IN WORDS OR NUMBERS ON THE CONTRACT DRAWINGS. DO NOT SCALE THE DRAWINGS TO DETERMINE DIMENSIONS.

THESE CONTRACT DRAWINGS CONTAIN DATA INTENDED SPECIFICALLY FOR THE NOTED PROJECT AND CLIENT. THEY ARE NOT INTENDED FOR USE ON EXTENSIONS OF THIS PROJECT OR FOR REUSE ON ANY OTHER PROJECT.

THE COPYING AND/OR MODIFICATION OF THIS DOCUMENT OR ANY PORTION THEREOF WITHOUT THE WRITTEN PERMISSION OF PAULUS, SOKOLOWSKI, AND SARTOR IS PROHIBITED.

COPYRIGHT 2019 PAULUS, SOKOLOWSKI, AND SARTOR — ALL RIGHTS RESERVED.

CONSULTANTS

PS&S
integrating design & engineering
67A MOUNTAIN BOULEVARD EXTENSION
P.O.BOX 4039
WARREN, NEW JERSEY 07059
PHONE:(732) 560-9700
FAX: (732) 560-9768

LISA A. DIGEROLAMO, P.E.
PROFESSIONAL ENGINEER
NEW YORK LIC. NO. 086749

DRAFT

SIGNATURE DATE

REVISIONS/ISSUES

REV	DATE	DESCRIPTION

PROJECT TITLE

PRELIMINARY & FINAL SITE PLAN

Gan-Eden Estates

TOWN OF THOMPSON SULLIVAN COUNTY NEW YORK

TAX LOT SECTION 2, BLOCK 1/ LOT 6.3

SHEET TITLE

SANITARY SYSTEM DETAILS AND NOTES

INITIAL DATE: OCT. 15, 2019	JOB NO.: 01895.0053
SCALE: NOT TO SCALE	B/O
DRAWN: C.Y. / F.M.	SHEET NO.: C-18
CHKD.: L.A.D.	80 OF 103

FILE NAME: P:\01895\00\Dwgs\Design\18-SITE\18-Site1-C-18.DWG LAST EDIT: 10/15/2019 - 03:54:12 PM LOGIN: lisa@