GENERAL NOTES: (FOR ALL INLETS)

1. **FOOTING AND INVERT TO BE CLASS B CONCRETE.**
2. **IF WALL CONSTRUCTION IS NOT CONCRETE, THE WALLS SHALL BE PLASTERED INSIDE AND OUT WITH 1/2" THICK CEMENT PLASTER. PROVIDE 3/4" DIAMETER ALUMINUM LADDER RUNGS AS SHOWN.**
3. **WALLS BELOW THE DEPTH OF 10'-0" (MEASURED FROM THE INLET GUTTER TO THE INVERT) SHALL BE INCREASED TO 12" IN WIDTH AND 12 " IN DEPTH.**

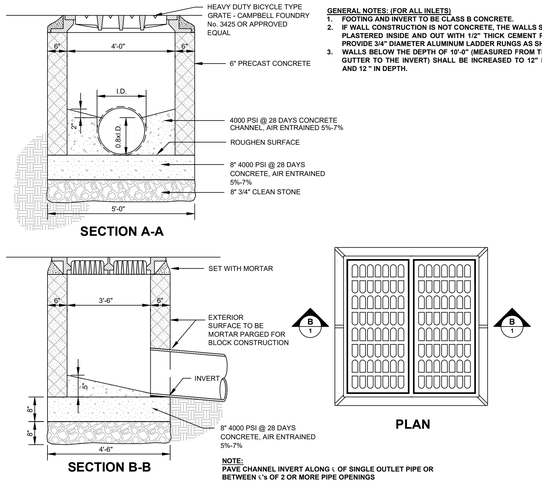

NOTE:
PAVE CHANNEL INVERT ALONG ∖ OF SINGLE OUTLET PIPE OR BETWEEN ∖'s OF 2 OR MORE PIPE OPENINGS

1 INLET DOUBLE "E"
SCALE: NTS

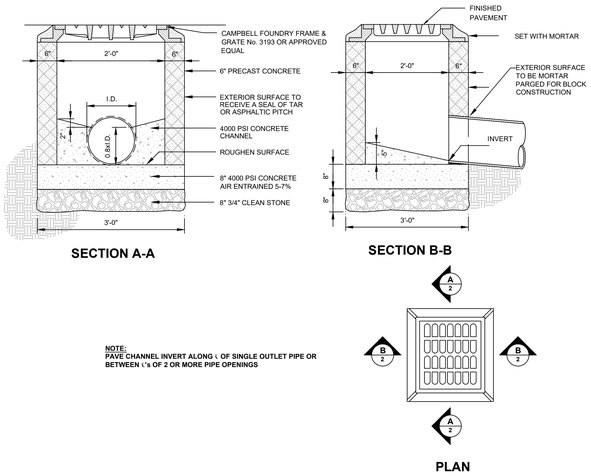

NOTE:
PAVE CHANNEL INVERT ALONG ∖ OF SINGLE OUTLET PIPE OR BETWEEN ∖'s OF 2 OR MORE PIPE OPENINGS

2 AREA INLET FOR 15" PIPE
SCALE: NTS

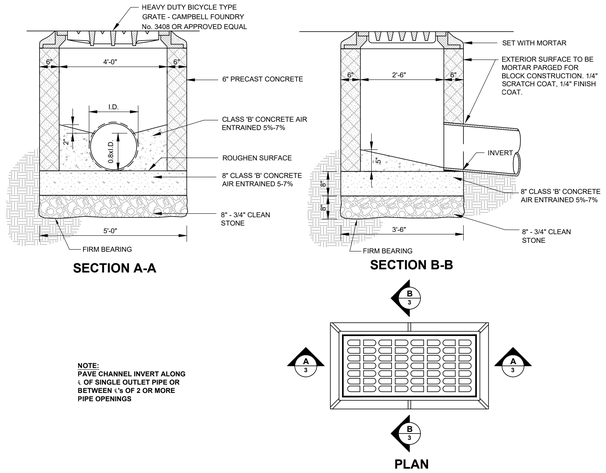

NOTE:
PAVE CHANNEL INVERT ALONG ∖ OF SINGLE OUTLET PIPE OR BETWEEN ∖'s OF 2 OR MORE PIPE OPENINGS

3 AREA INLET FOR PIPE 18" AND UP
SCALE: NTS

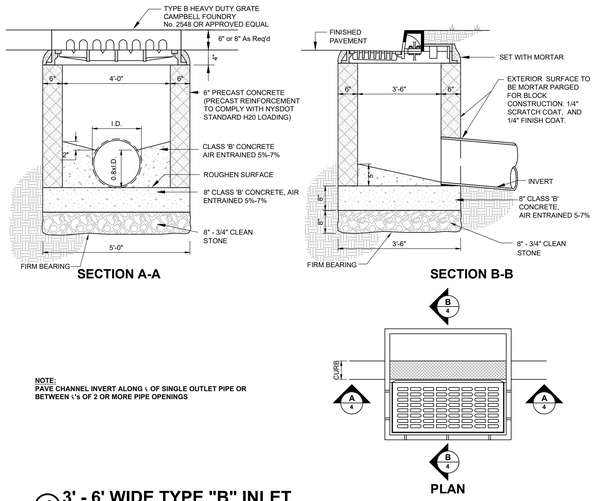

NOTE:
PAVE CHANNEL INVERT ALONG ∖ OF SINGLE OUTLET PIPE OR BETWEEN ∖'s OF 2 OR MORE PIPE OPENINGS

4 3' - 6' WIDE TYPE "B" INLET
SCALE: NTS

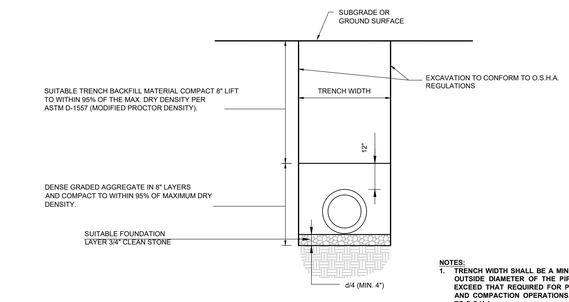

NOTES:

1. **TRENCH WIDTH SHALL BE A MINIMUM OF 1' EACH SIDE PLUS THE OUTSIDE DIAMETER OF THE PIPE. TRENCH WIDTH SHALL NOT EXCEED THAT REQUIRED FOR PROPER INSTALLATION BACKFILL AND COMPACTION OPERATIONS. TRENCH WALLS TO CONFORM TO O.S.H.A.**
2. **SUITABLE BACKFILL MATERIAL SHALL BE APPROVED BY THE GEOTECHNICAL ENGINEER PRIOR TO INSTALLATION.**
3. **WHERE TRENCH PASSES THROUGH EXISTING PAVEMENT, THE PAVEMENT SHALL BE MECHANICALLY CUT. PATCHING SHALL CONSIST OF TACKING EDGES OF EXISTING PAVEMENT.**

5 TYPICAL TRENCH
SCALE: NTS

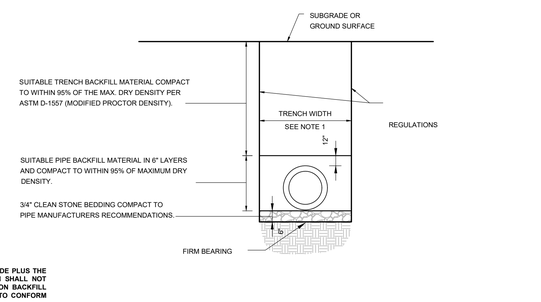

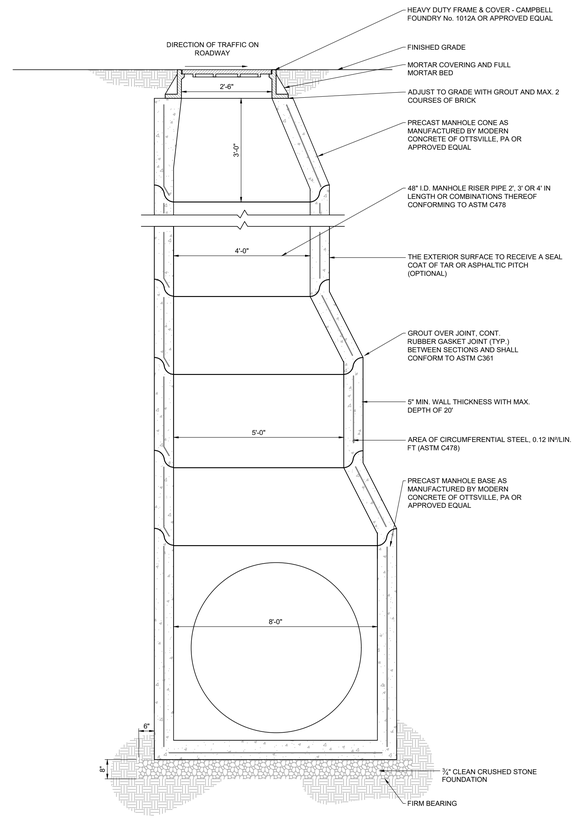

9 LARGE PRECAST MANHOLE
SCALE: NTS

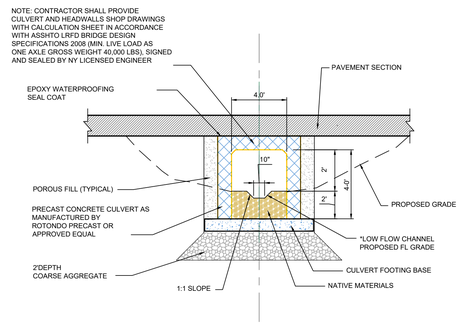

6 CONCRETE CULVERT
SCALE: NTS

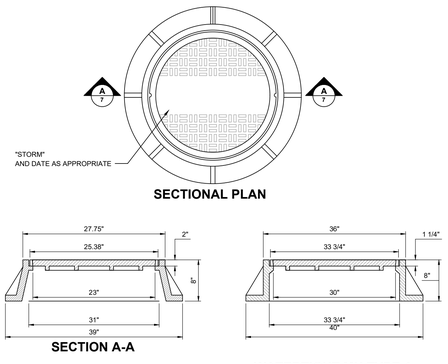

NOTES:

1. **MH FRAME AND COVER SHALL BE CAMPBELL FOUNDRY PATTERN #1012B (OR APPROVED EQUAL)**
2. **WATERTIGHT MH FRAME AND COVER SHALL BE CAMPBELL FOUNDRY PATTERN # 1503**

7 STORM MANHOLE COVER AND FRAME
SCALE: NTS

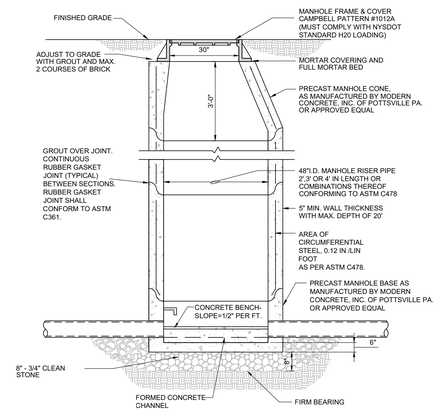

8 STORM SEWER MANHOLE
SCALE: NTS

It is a violation of NYS Education Law, Article 145 Section 7209.2, for any person, unless he is acting under the direction of a licensed professional engineer or land surveyor, to alter an item in any way. If an item bearing the seal of an engineer or land surveyor is altered, the altering engineer or land surveyor shall affix to the item his seal and the notation "altered by" followed by his signature and the date of such alteration, and a specific description of the alteration.

ALL DIMENSIONS MUST BE VERIFIED BY THE CONTRACTOR. NOTIFY PAULUS, SOKOLOWSKI AND SARTOR OF ANY CONFLICTS, ERRORS, AMBIGUITIES, OR DISCREPANCIES IN THE CONTRACT DRAWINGS OR SPECIFICATIONS BEFORE PROCEEDING WITH CONSTRUCTION.

ALL DIMENSIONS SHALL BE AS NOTED IN WORDS OR NUMBERS ON THE CONTRACT DRAWINGS. DO NOT SCALE THE DRAWINGS TO DETERMINE DIMENSIONS.

THESE CONTRACT DRAWINGS CONTAIN DATA INTENDED SPECIFICALLY FOR THE NOTED PROJECT AT THE NOTED LOCATION. THEY ARE NOT TO BE USED FOR USE ON EXTENSIONS OF THIS PROJECT OR FOR REUSE ON ANY OTHER PROJECT.

THE COPYING AND/OR MODIFICATION OF THIS DOCUMENT OR ANY PORTION THEREOF WITHOUT THE WRITTEN PERMISSION OF PAULUS, SOKOLOWSKI, AND SARTOR IS PROHIBITED.

COPYRIGHT 2019 PAULUS, SOKOLOWSKI, AND SARTOR – ALL RIGHTS RESERVED.

CONSULTANTS

PS&S
integrating design & engineering

67A MOUNTAIN BOULEVARD EXTENSION
P.O.BOX 4039
WARREN, NEW JERSEY 07059
PHONE:(732) 560-9700
FAX: (732) 560-9768

LISA A. DIGEROLAMO, P.E.
PROFESSIONAL ENGINEER
NEW YORK LIC. NO. 086749

DRAFT

SIGNATURE DATE

REVISIONS/ISSUES

REV	DATE	DESCRIPTION

PROJECT TITLE

PRELIMINARY & FINAL SITE PLAN

Gan-Eden Estates

TOWN OF THOMPSON SULLIVAN COUNTY NEW YORK

TAX LOT
SECTION 2,
BLOCK 1/ LOT 6.3

SHEET TITLE

STORMWATER DETAILS

INITIAL DATE: OCT. 15, 2019	JOB NO.: 01895.0053
SCALE: NOT TO SCALE	B/O
DRAWN: C.Y. / F.M.	SHEET NO.
CHKD.: L.A.D.	C-14

76 OF 103